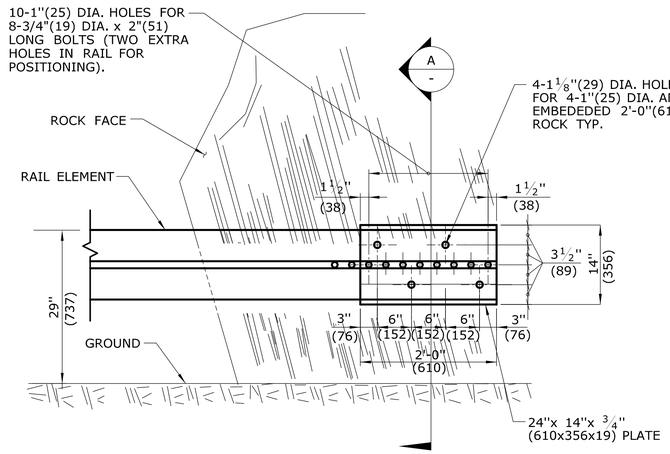

ELEVATION

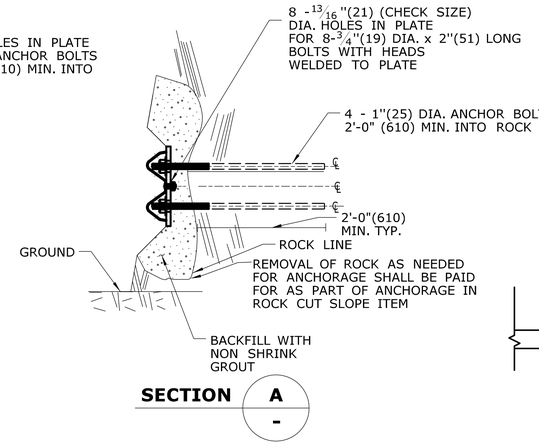

SECTION A -

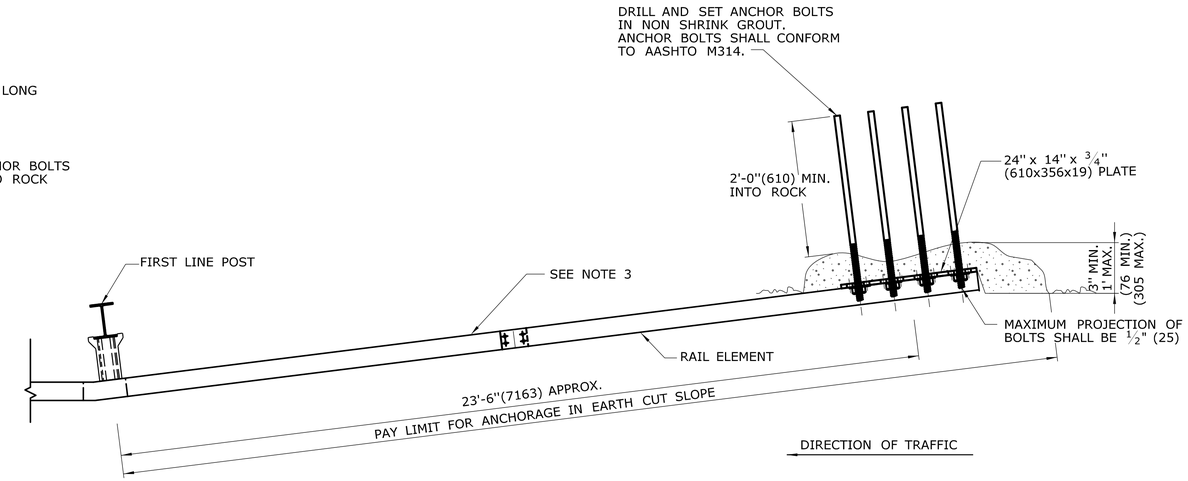

PLAN

DETAILS OF ANCHORAGE IN ROCK CUT SLOPE

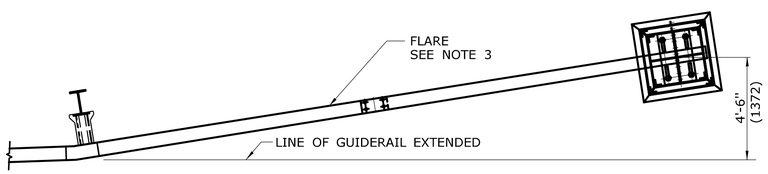

PLAN

DIRECTION OF TRAFFIC

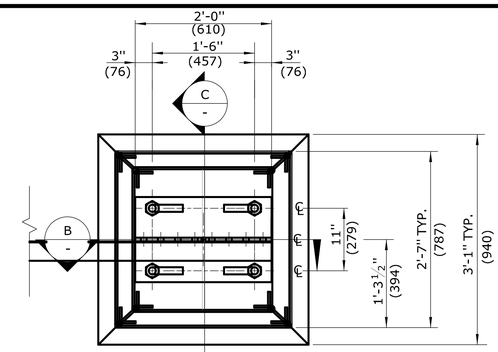

PLAN

GENERAL NOTES:

1. ANCHORAGE IN AN EARTH CUT SLOPE SHALL BE IN A CUT SLOPE 3:1 OR STEEPER. FULL RAIL HEIGHT MUST BE MAINTAINED TO TOE OF SLOPE AND A MINIMUM 1'(305) COVER SHALL BE PROVIDED OVER THE RAIL ELEMENT.
2. ANCHORAGE IN EARTH CUT SLOPE AND ROCK CUT SLOPE INSTALLED ON LIMITED ACCESS HIGHWAYS AND RAMPS SHALL USE CLASS B TYPE II (10 GAUGE) W-BEAM RAIL ELEMENTS.
3. THE MAXIMUM FLARE RATES FOR THESE TERMINAL TREATMENTS SHALL CONFORM TO THE SAME REQUIREMENTS AS STANDARD GUIDERAIL IN ACCORDANCE WITH THE CTDOT HIGHWAY DESIGN MANUAL.
4. MINIMUM RAIL HEIGHT FOR NEW CONSTRUCTION SHALL BE 29" (737) ± 1" (25).

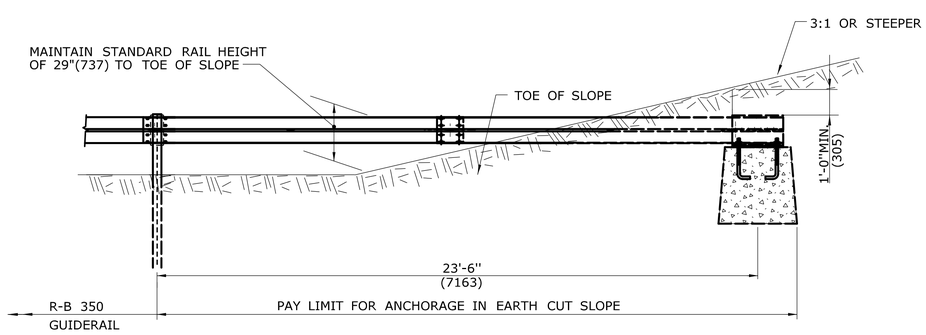

ELEVATION

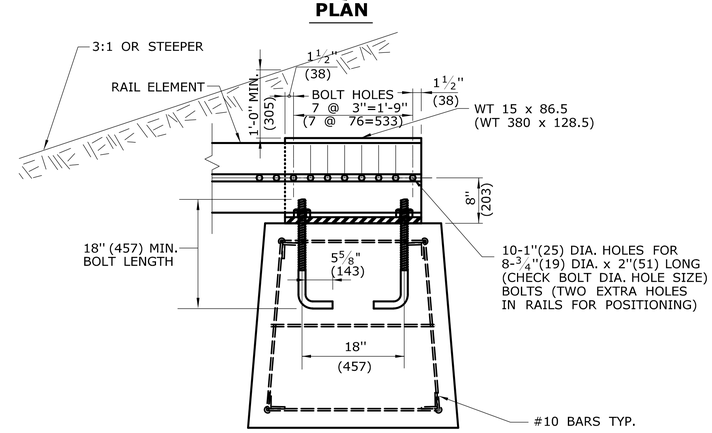

SECTION B -

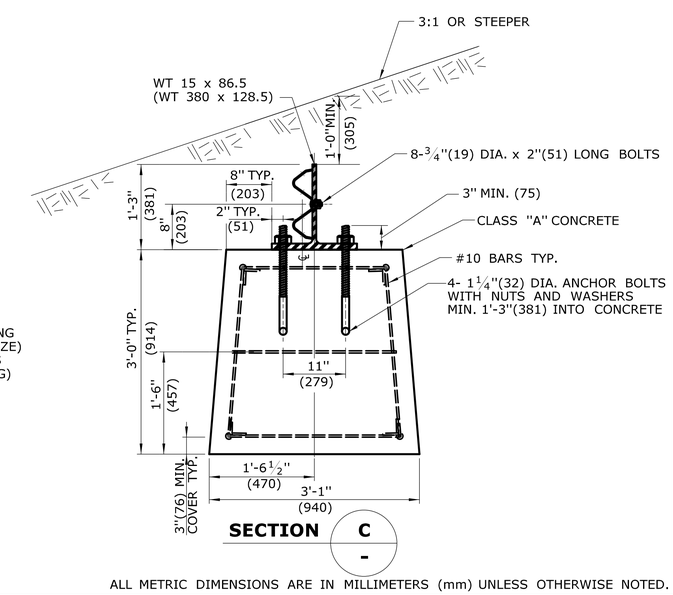

SECTION C -

DETAILS OF ANCHORAGE IN EARTH CUT SLOPE

ALL METRIC DIMENSIONS ARE IN MILLIMETERS (mm) UNLESS OTHERWISE NOTED.

REV.	DATE	REVISION DESCRIPTION
-	-	-
-	-	-
-	-	-
-	-	-
-	-	-
-	-	-

THE INFORMATION, INCLUDING ESTIMATED QUANTITIES OF WORK, SHOWN ON THESE SHEETS IS BASED ON LIMITED INVESTIGATIONS BY THE STATE AND IS IN NO WAY WARRANTED TO INDICATE THE CONDITIONS OF ACTUAL QUANTITIES OF WORK WHICH WILL BE REQUIRED.

Plotted Date: 9/30/2010

NOT TO SCALE

STATE OF CONNECTICUT
DEPARTMENT OF TRANSPORTATION

Filename: CTDOT_HIGHWAY_STD.dgn Model: 61 - HW-911_03

SUBMITTED BY: NAME/DATE/TIME: Digitally signed by Leo Fontaine DN: c=US, st=Connecticut, l=Newington, ou=Department of Transportation, email=Leo.Fontaine@ct.gov, o=State of Connecticut, cn=Leo Fontaine Date: 2010.10.16 15:04:20 -04'00'

APPROVED BY: NAME/DATE/TIME: James H. Norman Digitally signed by James H. Norman DN: c=US, st=CT, l=Newington, ou=Department of Transportation, email=james.norman@ct.gov, o=State of Connecticut, cn=James H. Norman Date: 2010.10.18 08:55:47 -04'00'

CTDOT STANDARD SHEET

OFFICE OF ENGINEERING

STANDARD SHEET TITLE:

ANCHOR IN EARTH CUT SLOPE ANCHOR IN ROCK CUT SLOPE

STANDARD SHEET NO.: HW-911_03